Note: This datasheet may be out of date.
Please download the latest datasheet of CDSCB10M7GF109-R0 from the official website of Murata Manufacturing Co., Ltd.

http://www.murata.com/en/products/productdetail?partno=CDSCB10M7GF109-R0

CDSCB10M7GF109-R0

To be discontinued RoHS REACH

Applications

Unsuitable Applications	Please be sure to read and comply with these "Precautions for use."
Specific Applications	Consumer equipment Please refer to Our Website and specifications, etc. for information about the performance, functions, quality, management, and safety required for the above applications, and use Products after confirming the performance and reliability of the actual Product.

Appearance & Shape

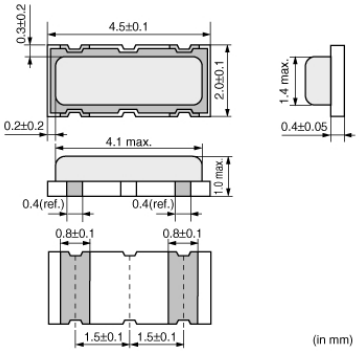

Packaging Information

Packaging	Specifications	Standard Packing Quantity
R0	180mm Embossed Tape	2000

Features

CDSCB10M7 series forms a resonator on a piezoelectric ceramic substrate. In combination with ICs, this type obtains stable demodulation characteristics in a wide bandwidth.They have 1.0mm max. thickness and small mounting area(4.5x2.0mm).

Features
1. Compact and high reliability and recommended for automotive applications.
2. Can be combined with various ICs. The IC is determined by the last number in the part number.
3. Stable demodulation characteristics can be obtained without adjustment.
4. Stable temperature characteristics
5. Available lead (Pb) free solder reflow.

Attention
1.This datasheet is downloaded from the website of Murata Manufacturing Co., Ltd. Therefore, it's specifications are subject to change or our products in it may be discontinued without advance notice. Please check with our sales representatives or product engineers before ordering.
2.This datasheet has only typical specifications because there is no space for detailed specifications.
Therefore, please review our product specifications or consult the approval sheet for product specifications before ordering.

Note: This datasheet may be out of date.
Please download the latest datasheet of CDSCB10M7GF109-R0 from the official website of Murata Manufacturing Co., Ltd.

http://www.murata.com/en/products/productdetail?partno=CDSCB10M7GF109-R0

CDSCB10M7GF109-R0

Specifications

Operating Temperature Range	-20℃ to 80℃
Shape	SMD
Elements	1
Center Frequency	10.700MHz
Nominal Center Value	Yes
Recovered Audio 3dB BW	fn±100kHzmin.
Distortion(max.)	3%
Area of Distortion	[at fn]
Recovered Audio Output	170mVmin.
IC	TK14588V
IC Maker	TOKO
Detection Method	quadrature type
Mass	21.84mg

Attention
1.This datasheet is downloaded from the website of Murata Manufacturing Co., Ltd. Therefore, it's specifications are subject to change or our products in it may be discontinued without advance notice. Please check with our sales representatives or product engineers before ordering.
2.This datasheet has only typical specifications because there is no space for detailed specifications.
Therefore, please review our product specifications or consult the approval sheet for product specifications before ordering.

Note: This datasheet may be out of date.
Please download the latest datasheet of CDSCB10M7GF109-R0 from the official website of Murata Manufacturing Co., Ltd.

http://www.murata.com/en/products/productdetail?partno=CDSCB10M7GF109-R0

CDSCB10M7GF109-R0

Product Data

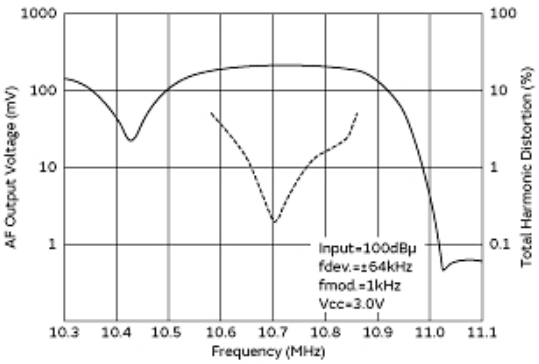

Frequency Characteristics

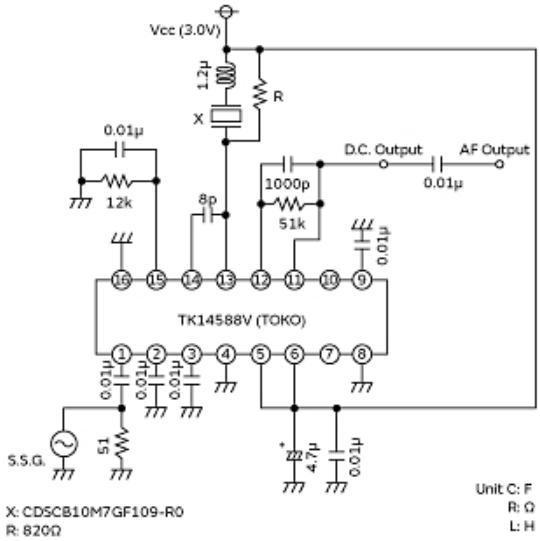

Measurement Circuit

Attention
1.This datasheet is downloaded from the website of Murata Manufacturing Co., Ltd. Therefore, it's specifications are subject to change or our products in it may be discontinued without advance notice. Please check with our sales representatives or product engineers before ordering.
2.This datasheet has only typical specifications because there is no space for detailed specifications.
Therefore, please review our product specifications or consult the approval sheet for product specifications before ordering.