Dimensions

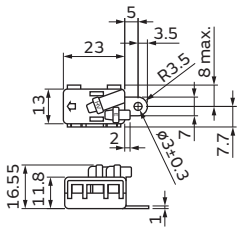

Detail C

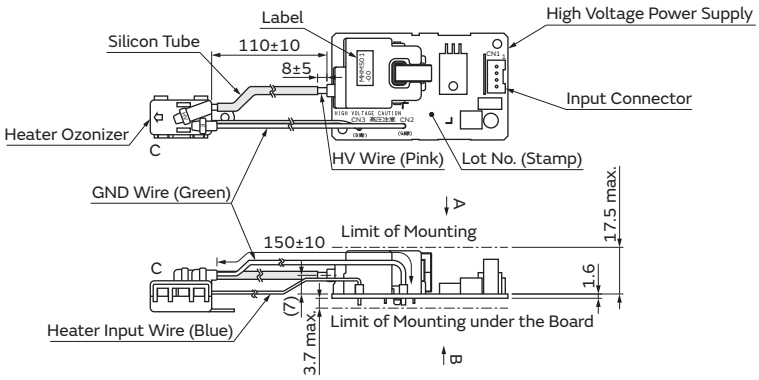

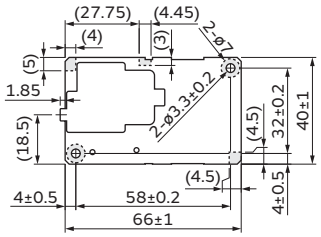

View A

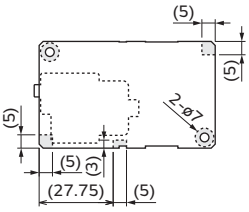

View B

Prohibit Area of Part-mounting